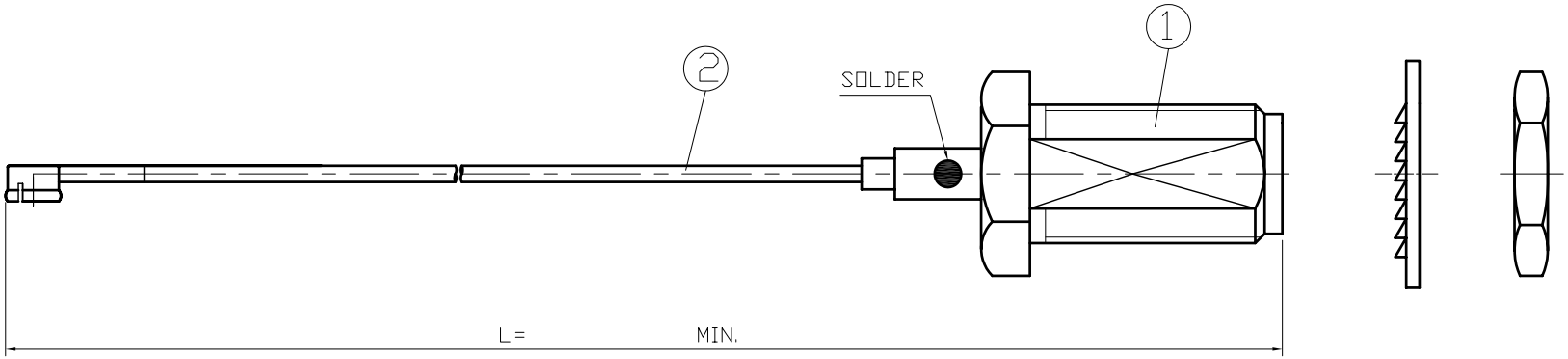


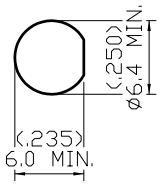


MOUNTING HOLE

NOTES: UNLESS OTHERWISE SPECIFIED

1. BODIES: BRASS PER JIS-C3604
2. CENTER CONTACT: BRASS PER JIS-C3604
   BERYLLIUM COPPER PER JIS-C1730B
3. INSULATION: TEFLON PER ASTM D1457 AND ASTM D1710
4. CONNECTOR INTERFACE PER MIL-STD-348A
5. PART TO BE CLEAN AND FREE OF BURRS

| NO | DESCRIPTION | Q'TY | FINISH |
|---|---|---|---|
| 2 | SSMT | 1 | MURATA-08 |
| 1 | 19-04-8 0.83 (50Ω) | 1 | |

| | | | | | | | | | |
|---|---|---|---|---|---|---|---|---|---|
| 製圖 | DRAWN | TOLERANCE | | 品名 | Murata GSC-SMA B/H 110mm | 日期 | DATE | 版次 | REV. |
| | Elvis | .X | ±0.2 | TITLE | | | 11.25.02 | | A-0 |
| 檢圖 | CHECK | .XX | ±0.1 | 單位 | UNIT | DWG.NO. | ADA-3000-110 | | |
| | Monica | | | | mm(in) | | | | |
| 認定 | APPROVAL | .XXX | ±0.05 | 比例 | SCALE | ADACTUS | | | |
| | Lewis | ANGLE | ±5° | | 4:1 | | | | |